PARTS LIST FOR
WC-100-0ME3
WATER CANNON

©Copyright 2000, Mi-T-M Corporation

Congratulations on the purchase of your new Mi-T-M Water Cannon! This parts listing has been complied for your benefit. You can be assured your Mi-T-M Water Cannon was constructed and designed with quality and performance in mind. Each component has been rigorously tested to insure the highest level of acceptance.

The contents of this parts listing are based on the latest product information available at the time of publication. Mi-T-M reserves the right to make changes in price, color, materials, equipment, specifications or models at any time without notice.

WARNING

THIS IS A PROFESSIONAL CLEANING SYSTEM. CAUTION SHOULD BE OBSERVED WHEN USING OR REPAIRING THIS UNIT! READ AND FOLLOW THE SAFETY WARNINGS LISTED BELOW BEFORE ATTEMPTING ANY REPAIRS ON THIS WATER CANNON!

SAFETY WARNINGS

1. Serious injury or death could occur if the Water Cannon (Power Supply) is not properly grounded. Your Water Cannon is powered by electricity and may cause electric shock or electrocution if not installed properly. Installation to this unit, including all electrical connections, must comply with all local, state and national codes. Any electrical wiring or repairs performed on this Water Cannon should be done by Authorized Service Personnel in accordance with National and Local electrical codes.

2. NEVER alter or modify the equipment. Use only genuine Mi-T-M parts for repair of your Water Cannon. Failure to do so can cause hazardous operating conditions and will VOID warranty.

3. Know how to stop and bleed pressures quickly. Be thoroughly familiar with controls. Do not operate without protective gear. Follow the maintenance instructions specified in your operator's manual.

4. Before servicing, ALWAYS shut off the water and the unit. NEVER assume the Water Cannon is safe to work on just because it is not operating. It could restart at any time! ALWAYS disconnect from the power source.

©Copyright 2000, Mi-T-M Corporation

Table of Contents

MAIN ASSEMBLY 4
CENTRIFUGAL PUMP (3-2001) 6
CONTROL PANEL (208V/230V, 460V) 8
ELECTRICAL SCHEMATIC (208V/230V, 460V) 10
ELECTRICAL DIAGRAM (208V/230V, 460V) 11
WATER CANNON ACCESSORIES 12

©Copyright 2000, Mi-T-M Corporation

MAIN ASSEMBLY

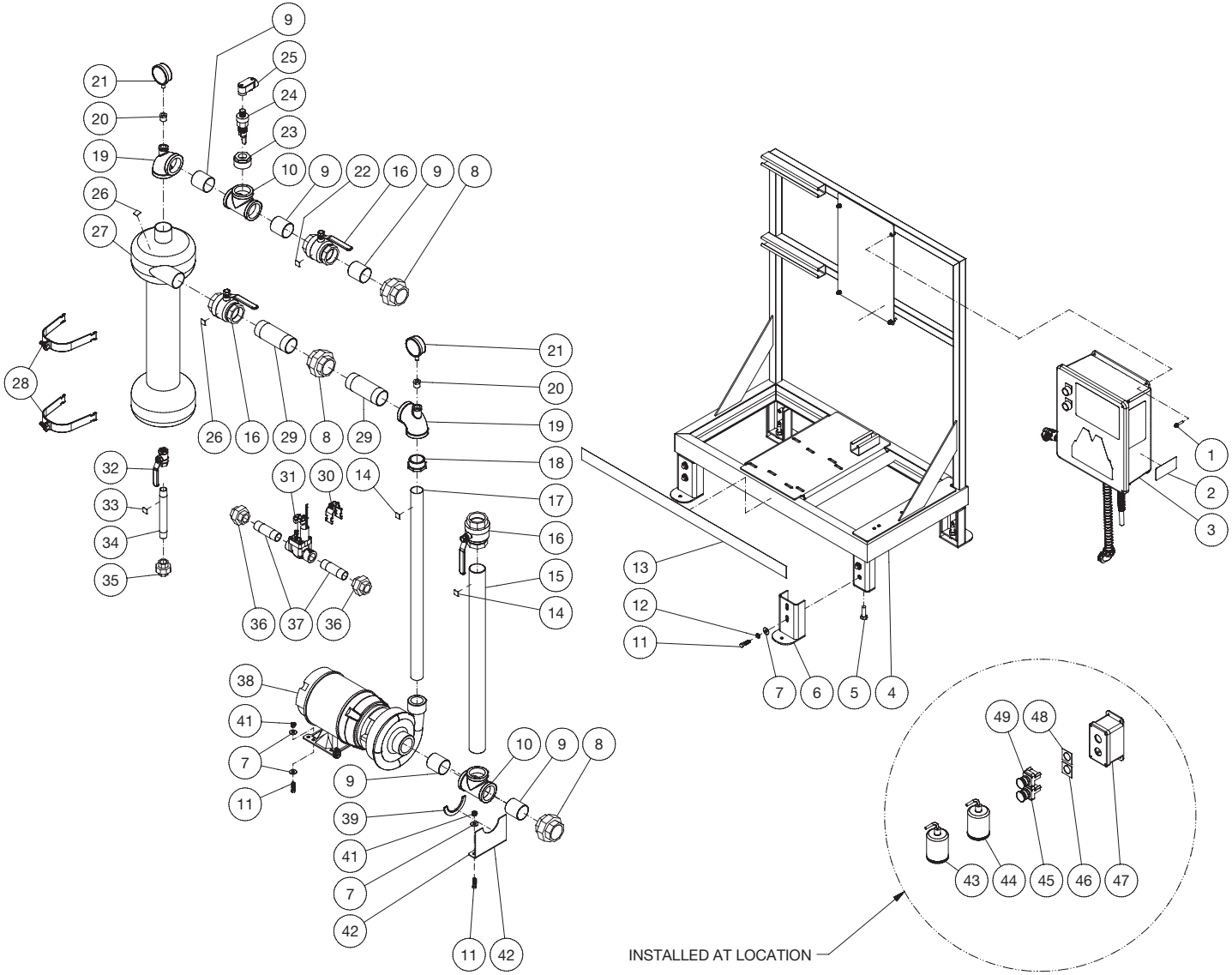

WC-100-0ME3 110817 MLK

©Copyright 2000, Mi-T-M Corporation

WC-100-0ME3 110817 MLK

MAIN ASSEMBLY

ITEM	DESCRIPTION	PART #	QTY.		ITEM	DESCRIPTION	PART #	QTY.
1	BOLT	27-8898	4		25	ELBOW	32-0642	1
2	DECAL- SILVER STICKER	N/A	1		26	DECAL #2	N/A	2
3	CONTROL BOX	N/A SEP	1		27	FILTER	19-2001	1
4	FRAME	5-0141A18	1		28	CLAMP	42-0032	2
5	BOLT	27-0218	4		29	STEEL PIPE	24-0209	2
6	FOOT	20-0502A01	4		30	CLAMP	42-0031	1
7	WASHER	28-0023	20		31	SOLENOID VALVE	55-0102	1
8	UNION	24-0229	3		32	BALL VALVE	22-0279	1
9	NIPPLE	24-0201	5		33	DECAL #4	N/A	1
10	TEE	24-0224	2		34	NIPPLE	24-0207	1
11	BOLT	27-0118	14		35	UNION	24-0227	1
12	LOCKWASHER	29-0008	8		36	UNION	24-0228	2
13	DECAL Mi-T-M STRIPE	34-2282	1		37	NIPPLE	24-0208	2
14	DECAL #1	N/A	2		38	PUMP	Mar-01	1
15	STEEL PIPE - 2”	24-0214	1		39	EDGING *(ONE FOOT REQUIRED)	33-0020	1
16	BALL VALVE	22-0288	3		41	LOCKNUT	30-0159	6
17	STEEL PIPE - 1 1/2”	24-0212	1		42	BRACKET	20-0503A01	1
18	BUSHING	24-0190	1		43	FLOAT	32-0528	1
19	TEE	24-0220	2		44	FLOAT	32-0530	1
20	REDUCER	23-0056	2		45	SWITCH	32-0606	1
21	GAUGE	22-0291	2		46	LEGEND	32-0607	1
22	DECAL #3	N/A	1		47	ELECTRIC BOX	32-0605	1
23	REDUCER	24-0233	1		48	LEGEND	32-0609	1
24	FLOW SWITCH	32-0641	1		49	SWITCH	32-0608	1

*MUST ORDER IN ONE FOOT LENGTHS

©Copyright 2000, Mi-T-M Corporation

CENTRIFUGAL PUMP (3-2001)

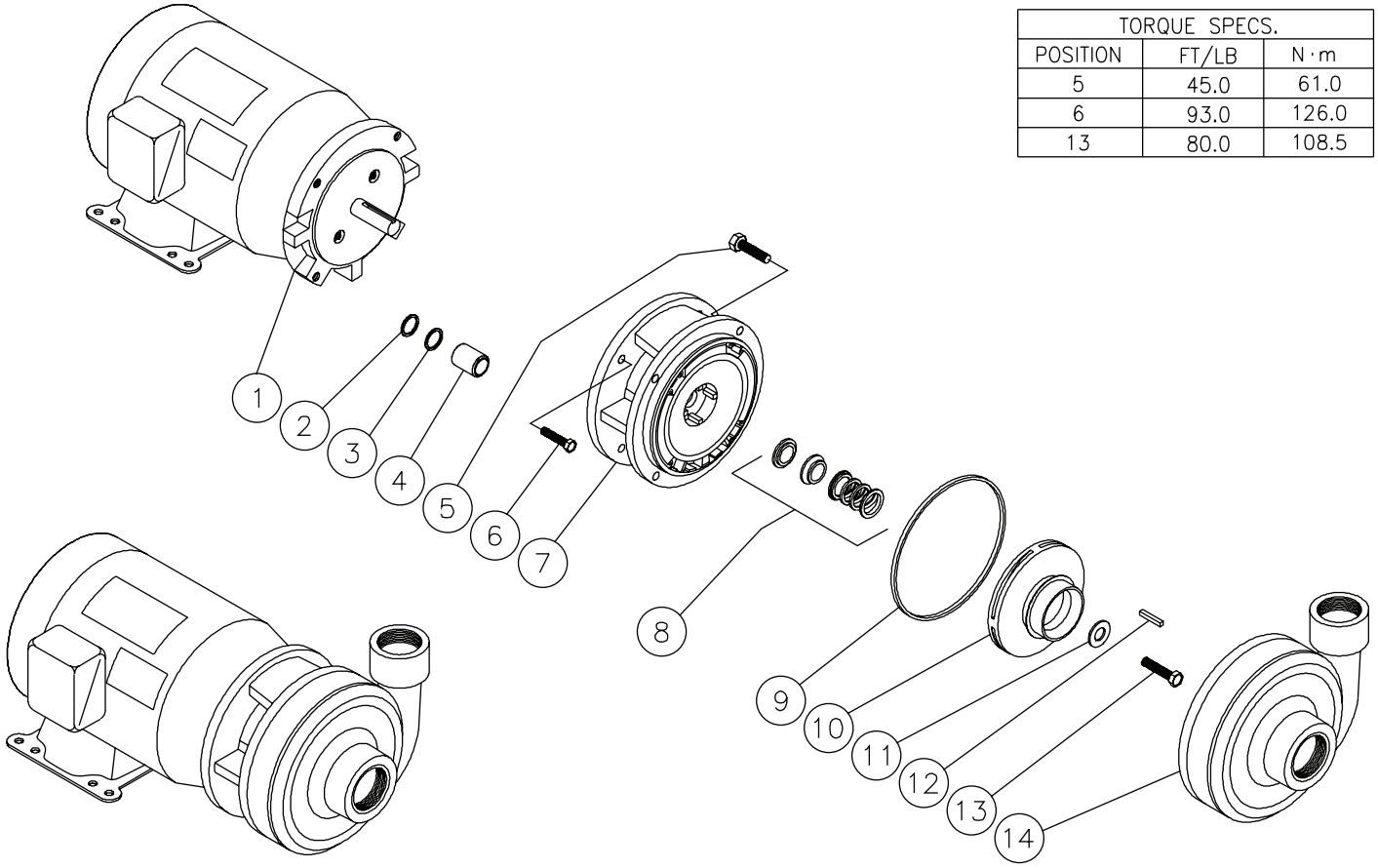

TORQUE SPECS.		
POSITION	FT/LB	N·m
5	45.0	61.0
6	93.0	126.0
13	80.0	108.5

3-2001 110917 MLK

©Copyright 2000, Mi-T-M Corporation

3-0201-110917 MLK			
CENTRIFUGAL PUMP			
REF. #	DESCRIPTION	PART #	QTY.
1	MOTOR- 7.5HP	N/A	1
2	O-RING	25-0484	1
3	O-RING SLEEVE	25-0485	1
4	SEAL SLEEVE	46-0865	1
5	BOLT	27-0116	4
6	BOLT	27-0119	4
7	BRACKET	N/A	1
8	MECHANICAL SEAL	46-0860	1
9	O-RING	25-0486	1
10	IMPELLER	46-0854	1
11	IMPELLER WASHER	28-1036	1
12	SQUARE KEY	43-0085	1
13	BOLT	27-8953	1
14	CASE	N/A	1

©Copyright 2000, Mi-T-M Corporation

CONTROL PANEL (208V/230V, 460V)

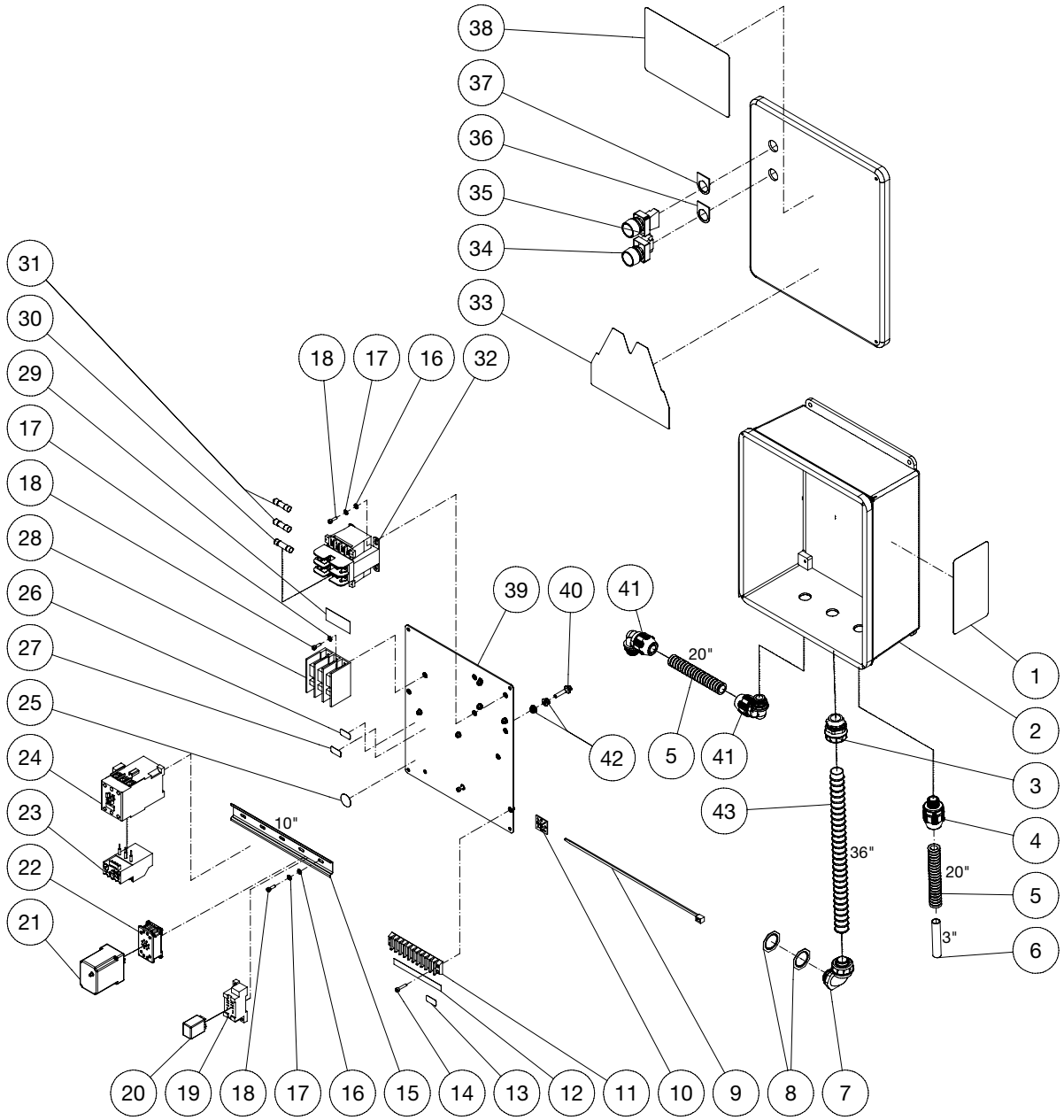

WC-100 CONTROL BOX 101518 MLK

©Copyright 2000, Mi-T-M Corporation

WC-100 CONTROL BOX 101518 MLK

CONTROL BOX ASSEMBLY

ITEM	DESCRIPTION	PART #	QTY.	ITEM	DESCRIPTION	PART #	QTY.
1	DECAL - RISK OF ELECTROCUTION (SEE 71-0102)	N/A	1	24	CONTACTOR (208/230V)	32-0597	1
2	ELECTRICAL BOX	32-1030	1	-	CONTACTOR (460V)	32-0327	1
3	CONDUIT STRAIGHT	32-0488	1	25	DECAL- GROUND PICTORIAL (SEE 71-0102)	N/A	1
4	CONDUIT FITTING- 1/2”	32-0255	1	26	DECAL - 230 VOLT (SEE 71-0102) (208/230V)	N/A	1
5	CONDUIT FLEX 1/2” BLACK *(FOUR FEET REQUIRED) (208/230V)	32-0253	2	-	DECAL - 208 VOLT (SEE 71-0102) (208/230V)	N/A	1
-	CONDUIT FLEX 1/2” BLACK *(FOUR FEET REQUIRED) (460V)	32-0253	1	-	DECAL - 460 VOLT (SEE 71-0102) (460V)	N/A	-
6	HEAT SHRINK *(ONE FOOT FEET REQUIRED)	33-0219	1	27	DECAL - 3 PHASE (SEE 71-0102)	N/A	1
7	CONDUIT ELBOW	32-0487	1	28	POWER BLOCK 3-POLE	32-0905	1
8	REDUCING WASHER	N /A	-	29	DECAL	N/A	1
9	ZIP TIE (208/230V)	33-0021	16	30	FUSE	32-0323	1
-	ZIP TIE (460V)	33-0021	15	31	FUSE	32-0325	2
10	MOUNTING BASE	32-0621	1	32	TRANSFORMER	32-0313	1
11	TERMINAL STRIP	32-0614	1	33	DECAL - Mi-T-M	34-2170	1
12	DECAL - TERMINAL STRIP	N/A	1	34	SWITCH PUSH BUTTON	32-0610	1
13	DECAL - 24V (SEE 71-0102)	N/A	1	35	SWITCH PUSH BUTTON	32-0534	1
14	BOLT	27-8930	2	36	LEGEND - START	32-0612	1
15	DIN RAIL *(ONE FOOT REQUIRED)	32-0316	1	37	LEGEND - STOP	32-0611	1
16	WASHER	28-0010	7	38	DECAL - WARNING/OPERATION	N/A	1
17	STAR WASHER	28-1009	9	39	ELECTRIC PANEL	20-0507	1
18	SCREW	27-8835	9	40	BOLT	27-8898	1
19	SOCKET - RELAY 8 PIN	32-0321	1	41	CONDUIT ELBOW	32-0254	2
20	RELAY - 24V	32-0320	1	42	NUT	30-3022	2
21	TIMER - OFF DELAY 24VOLT	32-0314	1	43	CONDUIT FLEX *(THREE FEET REQUIRED)	32-0486	1
22	SOCKET - TIMER 24VOLT	32-0315	1	-	DECAL SET	71-0102	1
23	OVERLOAD (460V)	32-0481	1	*MUST ORDER IN ONE FOOT LENGTHS			
-	OVERLOAD (208/230V)	32-1160	1				

©Copyright 2000, Mi-T-M Corporation

ELECTRICAL SCHEMATIC (208V/230V, 460V)

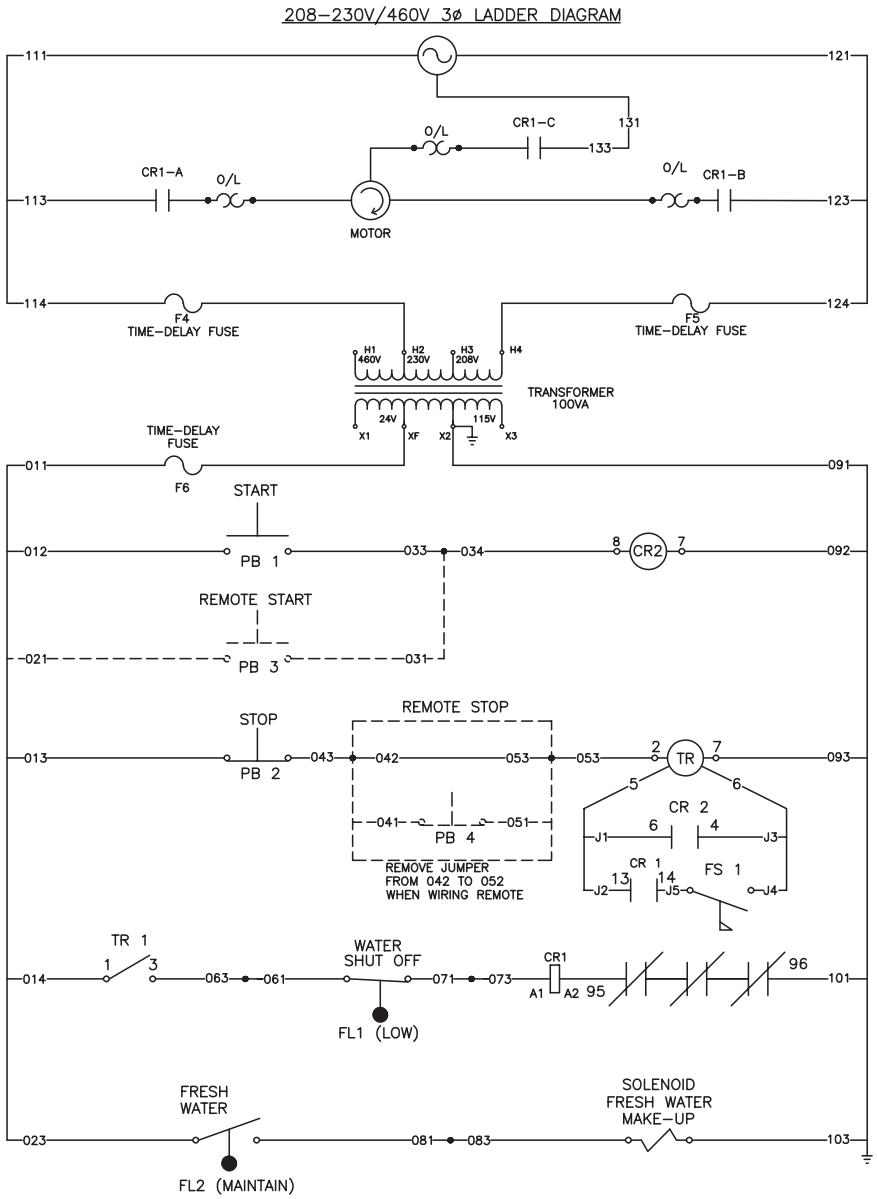

SCHEMATIC WATER CANNON 3 PHASE 112717 MLK

ELECTRICAL DIAGRAM (208V/230V, 460V)

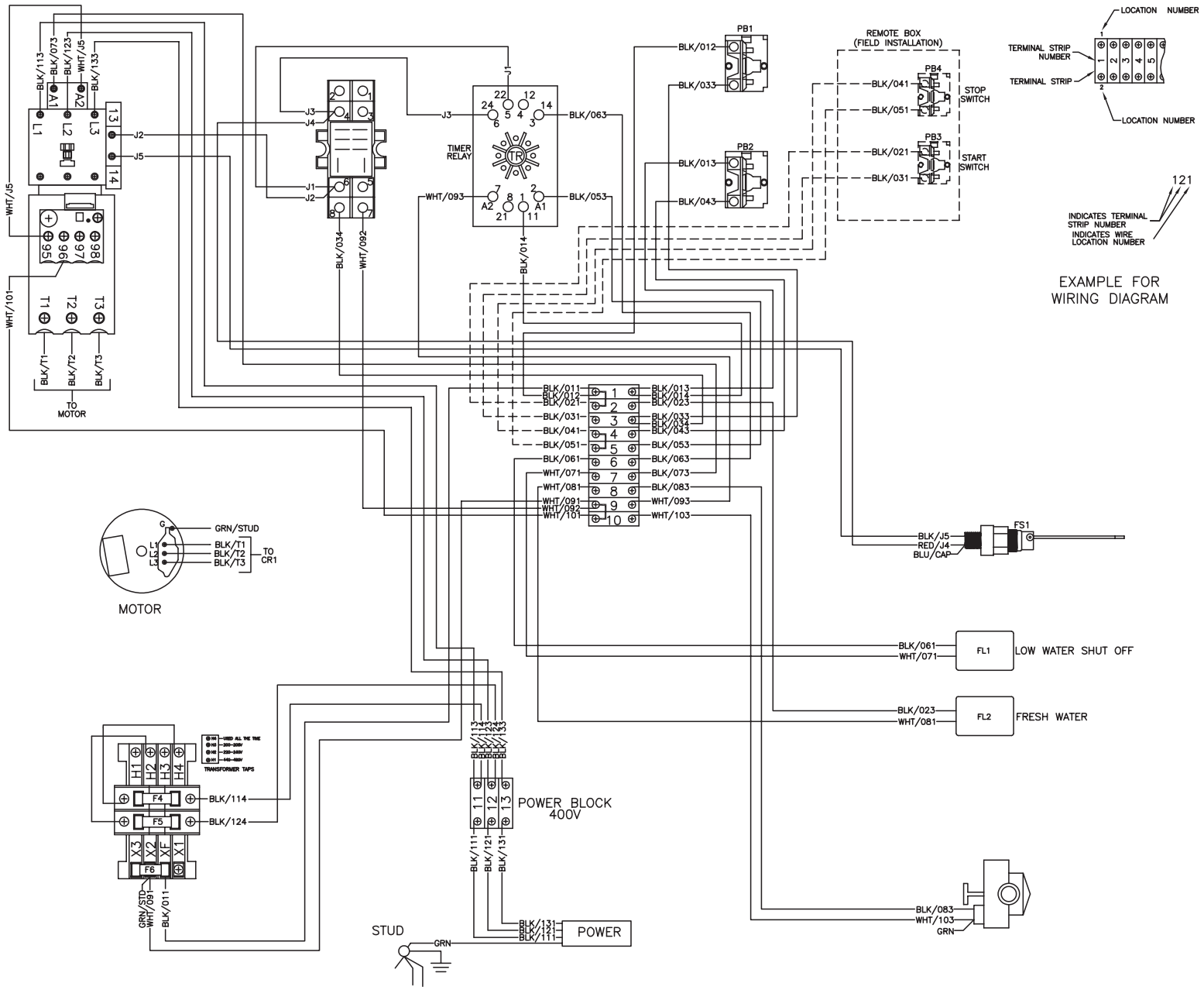

DIAGRAM WATER CANNON 3 PHASE 112717 MLK

WATER CANNON ACCESSORIES

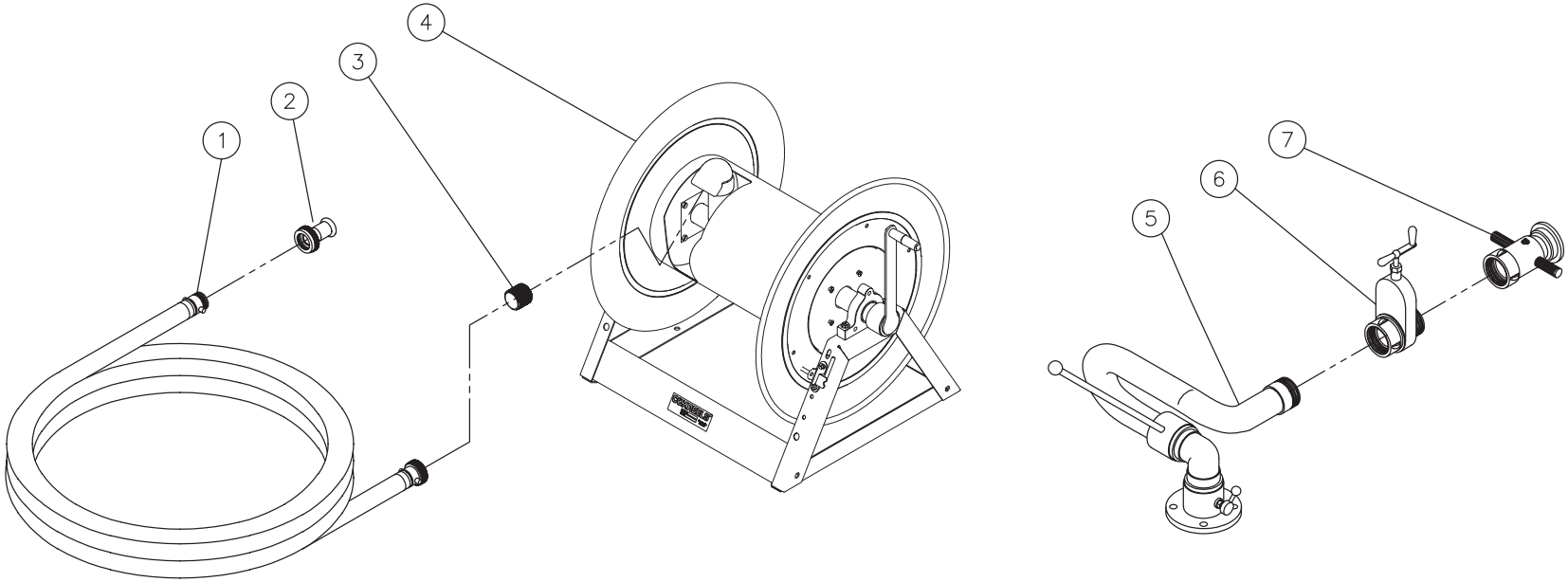

THESE ITEMS NOT SOLD WITH MACHINES
ALL ITEMS SOLD SEPARATELY

WC-100_150 ACCESSORIES 112817 MLK

©Copyright 2000, Mi-T-M Corporation

WC-100_150 ACCESSORIES 112817 MLK			
WATER CANNON ACCESSORIES			
ITEM	DESCRIPTION	PART #	QTY.
1	HOSE	15-2001	1
2	ADJUSTABLE NOZZLE	18-2009	1
3	NIPPLE	24-0355	1
4	HOSE REEL	50-2001	1
5	TURRET	18-2006	1
6	SHUT OFF NOZZLE	18-2005	1
7	ADJUSTABLE NOZZLE	18-2003	1
-	2” FOOT VALVE (NOT SHOWN) (WC-100)	22-0322	1
-	3” FOOT VALVE (NOT SHOWN) (WC-150)	22-0323	1
-	6” FOOT VALVE (NOT SHOWN) (WC-300)	22-0324	1
-	4” FOOT VALVE (NOT SHOWN) (ALL MODELS)	22-0400	1

©Copyright 2000, Mi-T-M Corporation

Manufactured by Mi-T-M
50 MI-T-M Drive, Peosta IA 52068
563-556-7484/ Fax 563-556-1235

©Copyright 2000, Mi-T-M Corporation